De Havilland Comet
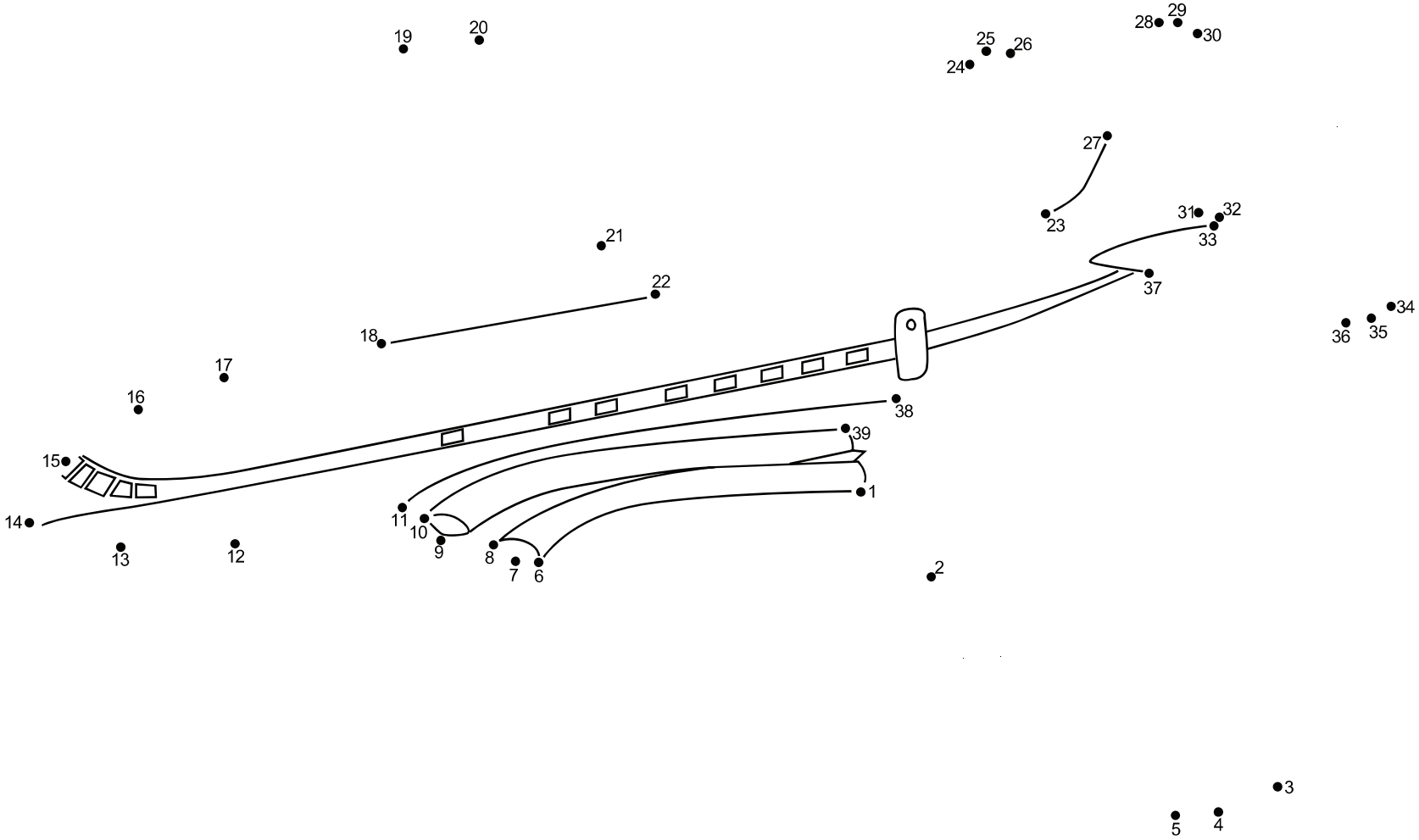
Role: First Commercial Jetliner	**Introduced:** 1952
Engines: 4 x de Havilland Ghost 50 Turbojet